MUELLER

OPERATING INSTRUCTIONS MANUAL

Line Stopper

Unit No. 4SW™

TABLE OF CONTENTS **PAGE**

Equipment and Maintenance 2

H-17440 Stopping Machine 3

H-17445 Completion Machine 4

Installing and Stopping-off 10" and 12" NO-BLO® Line Stopper Fittings 5 - 14

Calculating Number of Turns to Contact Main 15

⚠ WARNING:

1. Read and follow instructions carefully. Proper training and periodic review regarding the use of this equipment is essential to prevent possible serious injury and/or property damage. The instructions contained herein were developed for using this equipment on fittings of Mueller manufacturer only, and may not be applicable for any other use.
2. DO NOT exceed the pressure ratings of any components or equipment. Exceeding the rated pressure may result in serious injury and/or property damage.
3. Safety goggles and other appropriate protective gear should be used. Failure to do so could result in serious injury.
4. Pressure test, check for and repair leaks in all fittings and components each time one is installed or any joint or connection is broken. Failure to find and repair a leak from any source in the fittings, by-pass lines or equipment could result in an explosion and subsequent serious injury and/or property damage.
5. Mueller® Drilling Machines and Equipment have been carefully designed and engineered to work together as a unit. The use of equipment manufactured by someone other than Mueller may cause excessive wear or a malfunction of the Mueller machines.

All warranties, expressed or implied, for Mueller Drilling Machines are rendered null and void if the machines are used with shell cutters or equipment manufactured by someone other than Mueller.

F 8972 02/20

12/08/2025 - Benoit D.

NO-BLO® EQUIPMENT AND MAINTENANCE

Equipment

The Mueller® NO-BLO® equipment required for installing and stopping off 10" and 12" line stopper fittings consists of:

- One Mueller C1-36 Drilling Machine
- Two H-17440 (89430) Stopping Machines
- One H-17445 (89431) Completion Machine
- Two 83318 or 83565 Gate Valves*
- One set of Unit 4SW attachments

NOTE: Equipment listed above is based on a double stop-off.

*The 83318 gate valve attaches directly to fittings with class 400 flanges. It requires the use of an adapter (681528) to be used on stopper fittings with class 150 flanges. The optional 83565 gate valve can attach directly to the class 150 flange on these fittings without a separate adapter (this gate valve does not fit class 400 flanges).

Maintenance

Use pipe thread sealant on threads of machines or equipment if required to make a pressure tight threaded connection without using a gasket or O-ring seal.

Keep all machined and threaded surfaces of machines and equipment well lubricated with oil at all times. DO NOT USE OIL TO LUBRICATE STOPPER COVERS.

The following attachments are required for either 10" or 12" NO-BLO® Line Stopper Fittings:

- Steel Wedge Stopper
- Drilling Machine Adapter
- Shell Cutter, Hub, and Pilot Drill
- Adatper Ring (To attach 83318 Gate Valve to CL150 Stopper Fitting.)
- Bottom-Out Stopper (Use with Bottom-Out Stopper Fitting only.)

NOTE: Same shell cutter, pilot drill, hub, and stopper are used for both 10" and 12" fittings.

Steel wedge stoppers are the mechanical retracting type. Protector sleeve is included with steel wedge stopper. For bypass stop off, two sets of stoppers, stopping machines (with valves and/or adapters) are required. Only one set of all other attachments is required since all operations except stopping can be done on one fitting at a time.

*The line pressure must not exceed this amount (or the maximum working pressure of the fitting, whichever is lowest) when using this machine and equipment. If appropriate, the line pressure may be increased to maximum working pressure of fitting after completion plug and cap are securely in place.

NOTE: For the most current tooling, refer to the online Mueller Gas Distribution Catalog at muellergas.com.

⚠ WARNING: Before using this equipment, inspect the machine, control valve, adapters, miscellaneous piping components, and the fittings that will be attached to the main or service line to verify they are serviceable and able to contain the line and test pressures involved with the operation. Assure that all connecting threads and flanges, and all sealing gaskets and O-rings are in good condition, properly installed, and capable of effecting a gas tight seal.

DO NOT USE ANY PIECE OF EQUIPMENT OR COMPONENT IN QUESTIONABLE CONDITION.

After connecting all pieces of equipment on the fitting, but before subjecting the setup to line or test pressure, assure that all threaded or flanged connections are wrench tight and pressure test the setup using a suitable non-flammable inert gas introduced through an available Test Orifice: Control Valve — Bypass Relieve Valve outlet (place valve in bypass position when pressure testing). Repair any leakage found. Repeat this pressure test when any connection in the setup is disturbed.

DO NOT ALLOW LINE OR TEST PRESSURE INTO THE SETUP IF ANY LEAKAGE CANNOT BE STOPPED.

Failure to comply with this warning could result in fire or explosion, and the possibility for property damage, serious bodily harm, injury or even death.

Refer to Form 9879 for recovering Steel Wedge Stoppers with black rubber cover.

Refer to Form 12327 for instructions to replace orange urethane-coated Steel Wedge Stoppers.

MUELLER LINE STOPPER UNIT NO. 4SW

H-17440 Stopping Machine

Capacity and Use

The stopping machine is used to insert, expand and retract steel wedge or bottom stoppers in 10" and 12" fittings.

The steel body has a 4" flanged bypass connection. The machine is used with special 14" steel gate valves*, and includes a crank type operating handle that incorporates a lifting yoke, wrenches and necessary bolts.

The H-17440 machine is used with all 10" and 12" fittings having class 400 flanges. Use 83318 gate valve with these fittings (class 400 flanges): H-17257, H-17357, H-17264, H-17364, H-17464.

Use 83318 gate valve and 681528 adapter, or use 83565 gate valve (no adapter required) with these fittings (class 150 flanges): H-17255, H-17355, H-17260, H-17270, H-17360, H-17460, H-17265**, H-17266**.

For complete information on the uses of these machines and the equipment and attachments required for their use see the latest Mueller Gas Catalog at muellergas.com.

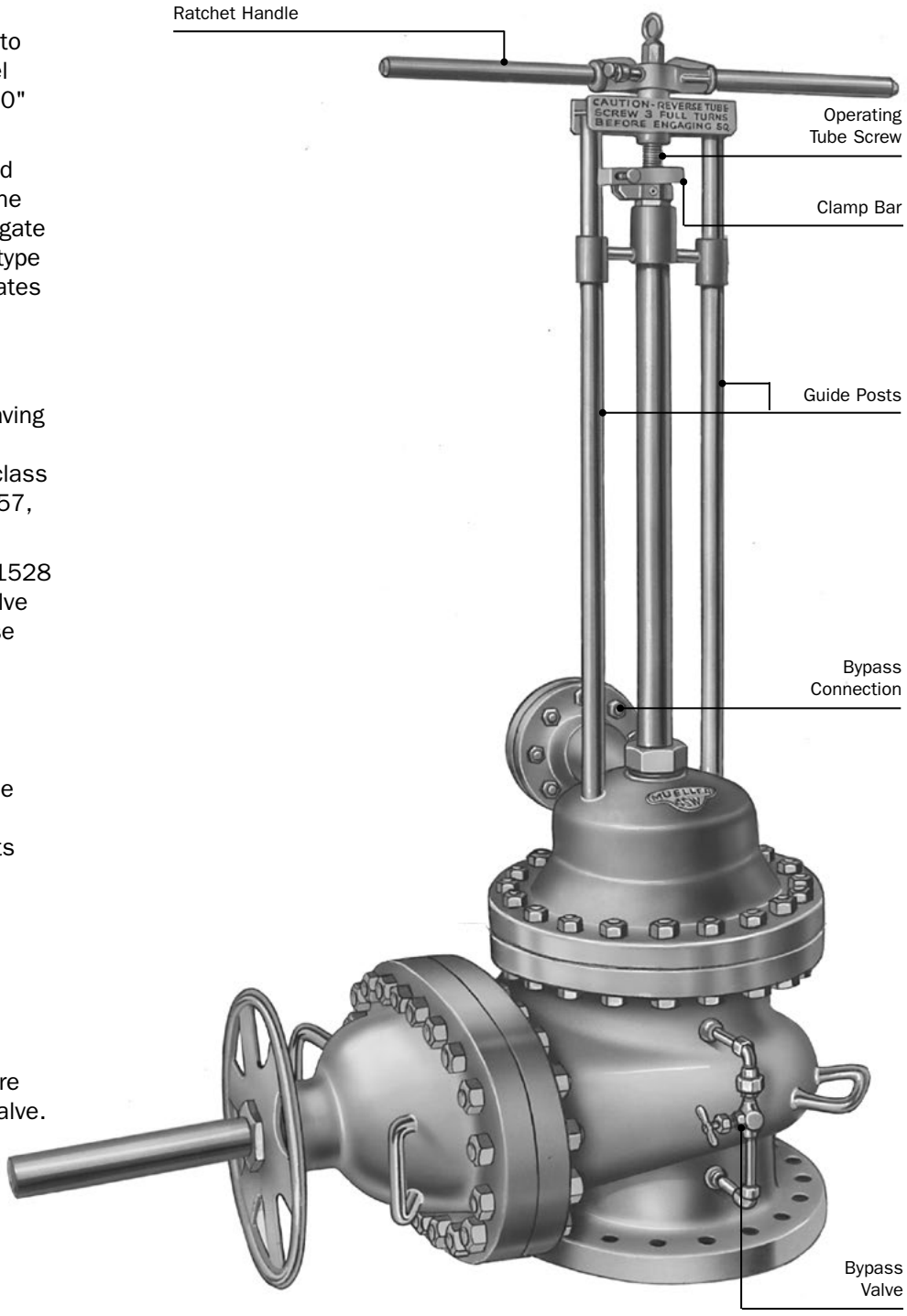

Working Pressure and Temperature Rating

- 500 psig*** (8273 kPa) Maximum Working Pressure with 83318 CL400 Gate Valve.
- 275 psig*** (1896 kPa) Maximum Working Pressure with 83565 CL150 Gate Valve
- 100° F (38° C) Maximum Temperature Rating

*The 83318 gate valve attaches directly to fittings with class 400 flanges and is included with the H-17440 stopping machine – it requires the use of an adapter (681528) to be used on stopper fittings with class 150 flanges. The optional 83565 gate valve can attach directly to the class 150 flange on these fittings without a separate adapter (this gate valve does not fit class 400 flanges).
**The maximum working pressure for these mechanical joint fittings is 175 psig. The line pressure must not exceed this amount when using these fittings.
***The line pressure must not exceed this amount (or the maximum working pressure of the fitting, whichever is lowest) when using this machine and equipment. If appropriate, the line pressure may be increased to maximum working pressure of fitting after completion plug and cap are securely in place.

Capacity and Use

The completion machine is used to extract or insert completion plugs, and also to align all equipment on the fitting before the drilling and/or stopping operation is started.

This machine is a balanced pressure design permitting machine shaft to be easily advanced or retracted. It is never necessary to operate machine against full effective force of line pressure.

For complete information on the uses of these machines and the equipment and attachments required for their use see the latest Mueller Gas Catalog at muellergas.com.

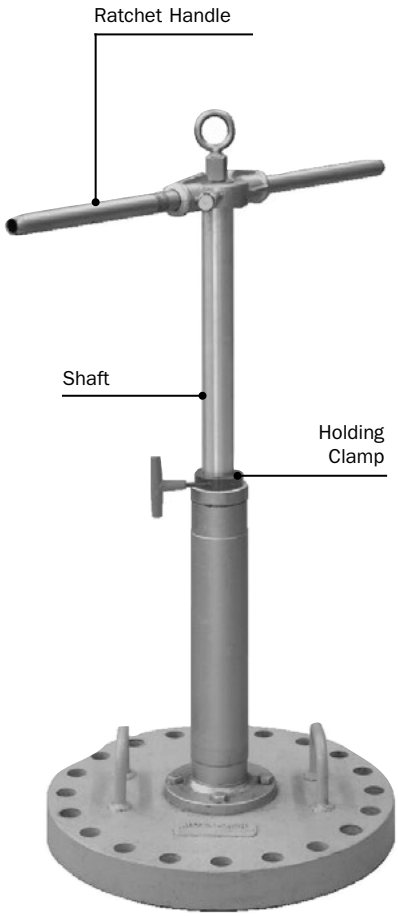

Working Pressure and Temperature Rating

- 500 psig* (8273 kPa) Maximum Working Pressure with 83318 CL400 Gate Valve.
- 275 psig* (1896 kPa) Maximum Working Pressure with 83565 CL150 Gate Valve
- 100° F (38° C) Maximum Temperature Rating

Completion Machine Attachments

The H-17445 completion machine attachments (which are sold separately) include inserting tool, extracting tool, alignment tool, completion plug wrench, thread cleaning tool, and inspection flange. Only one set of attachments is required for aligning, inserting or extracting completion plug since these operations can be done on one fitting at a time.

INSTALLATION INSTRUCTIONS

A–Attach Line Stopper Fitting

To install a Mueller NO-BLO® welding line stopper fitting, follow instructions 1 – 7 (**Fig. A**).



A. Typical Fitting

1. Thoroughly clean the pipe where the fitting is to be attached.

2. Remove completion cap and completion plug from fitting.

3. Place the two halves around pipe. Block up under bottom half of fitting and lower top half onto bottom half. Check to be sure the two halves are in exact alignment with each other.

4. Tack weld the four corners of fitting halves together, but still free of pipe.

5. Locate fitting in the desired position and weld sides together.

6. Weld each end permanently to the pipe.

7. When using bottom-out or side-out fittings (**Fig. B**) weld new piping between openings in bottom or side of fittings.



B. Bottom-Out Fitting — Side-Out Fitting

To install a Mueller NO-BLO® mechanical joint line stopper fitting, follow instructions 8 – 16 (**Fig. C**).



C. Mechanical Joint Fitting

8. Thoroughly clean pipe where fitting is to be attached.

9. Remove completion cap. (For protection during shipment, end screws are placed under completion cap of fitting.)

10. Separate top and bottom halves of fitting by running off side bolt nuts only. DO NOT remove end gaskets, end gasket followers, side bolts or side gaskets.

11. Back out pipe gripping set screws.

12. Lubricate rubber gaskets with soapsuds. (Add glycerin in freezing weather.)

13. Place two halves of fitting on pipe, block up under bottom half. Tighten side bolts evenly by pulling up each one a small amount at a time until completely tight. Maximum range of torque is 40 - 60 ft-lbs.

14. Locate fitting in the desired position. Insert and tighten end screws with a small wrench. Start at top and work around the fitting tightening each one a little at a time until all are evenly tight.

15. Tighten pipe gripping set screws to hold fitting firmly in place.

16. Remove completion plug.

B–Test Installation (Fig. D)

1. With completion plug removed, bolt completion cap to fitting ensuring gasket is in good condition and in place. Remove test plug in completion cap and attach air hose.

2. Apply air pressure and test for leaks with soapsuds or a leak detection fluid. (Add glycerin to soapsuds in freezing weather.)

3. Remove completion cap and replace test plug.

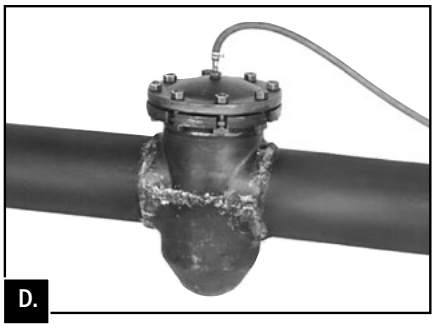

D.

C–Attach Gate Valve

1. Gate valve is a special 14" Mueller gate valve, for use with 10" and 12" line stopper fittings and must be installed with rubber faced disc up since pressure aids in seating the gate and keeping it tight when closed.

2. Attach gate valve to fitting.

a) Fittings with Class 150 flanges, use 83565 gate valve, or 83318 gate valve and 681528 Adapter. See page 4.

b) Fittings with Class 400 flanges, use gate valve 83318. See page 4.

3. With either gate valve, check to be sure gasket is in good condition and in place. Bolt nuts should be loose at this point to permit gate valve to be shifted if necessary during alignment operation.

D–Alignment Operation

1. Open gate valve, approximately 46 turns to fully open.

2. Close blow-off valve and bypass valve on each side of gate valve.

3. Attach plug alignment tool to completion plug.

a) Push fork to rearmost position and tighten thumb screw.

b) Thread end of the tool into inside threads in top of completion plug.

c) Loosen thumb screw, allowing fork lugs to engage with slots in completion plug.

4. Attach plug alignment tool, with completion plug, to shaft of completion machine.

a) Remove protector nut from end of shaft.

b) Insert recess or slot in plug alignment tool into matching lug on shaft of completion machine.

c) Thread coupler sleeve on plug alignment tool to shaft threads.

5. Withdraw shaft to rearmost position and tighten holding clamp to prevent shaft and completion plug from falling while machine is being placed on gate valve.

6. Attach completion machine to gate valve using only a few bolts and leave finger tight.

7. Hold back on shaft, loosen holding clamp and slowly advance shaft until completion plug contacts the fitting threads. DO NOT let the shaft and completion plug fall as this may cause damage to completion plug threads or fitting threads.

8. At this point it may be necessary to slightly shift gate valve on fitting or completion machine on gate valve to align completion plug threads with fitting threads.

9. Rotate shaft **clockwise** until completion plug threads are engaged with fitting threads at least ½".

10. Securely bolt gate valve to the fitting and mark position of completion machine flange location in relation to gate valve flange. This is for reference so completion machine can be properly positioned for final installation of completion plug when all work is completed.

11. Rotate shaft **counter-clockwise** until completion plug is unthreaded from fitting. Withdraw shaft to rearmost position, tighten holding clamp.

12. Remove completion machine from gate valve.

13. Hold back on shaft, loosen holding clamp and advance shaft. Remove plug alignment tool and completion plug from shaft.

14. Remove plug alignment tool from completion plug.

E–Attach, Test and Operate Drilling Machine

For detailed instructions, see Operating Instructions for Mueller C1-36 Drilling Machines.

1. Dress cutting edges of shell cutter and pilot drill before each cut by honing front edge of each tooth or flute. If shell cutter is very dull or teeth are damaged, it should be returned to the Mueller Decatur Factory for reconditioning. Always check pilot drill detents to be sure they are operating correctly. To dress cutting edge, keep stone flat against face of tooth or flute as shown in (**Fig. E). DO NOT use stone on tops of cutter teeth or drill flutes.**

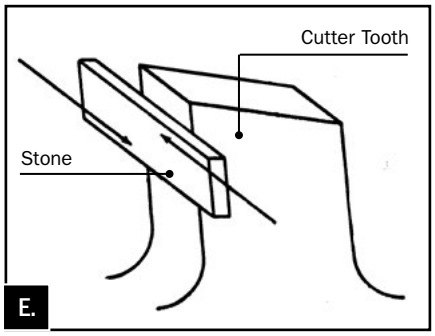

E.

2. Bolt a Mueller drilling machine adapter to drilling machine. Check to be sure that gasket is in good condition and in place.

Note: Make certain machined recess on adapter and lip on machine flange mate properly. Visually check adapter flange and machine flange to be sure they are flush.

3. Release automatic feed by pulling out automatic feed knob. (Directions are indicated on panel on rear of torque tube.)

4. Advance boring bar by rotating feed crank **counter-clockwise** until bolt-hole in boring bar is exposed beyond face of adapter. Remove hub-retaining bolt.

5. Thread pilot drill to shell cutter and hub.

6. Attach hub, shell cutter and pilot drill to boring bar of drilling machine by aligning hole in cutter hub. Insert hub retaining bolt.

7. Apply Mueller cutting grease to lead cutting edges of the shell cutter and pilot drill.

8. Retract boring bar to rearmost position by rotating feed crank **clockwise**.

9. Bolt drilling machine and adapter solidly to gate valve. Check to be sure gasket is in good condition and in place (**Fig. F**).

10. Refer to page 15 for instructions on a manual measurement.

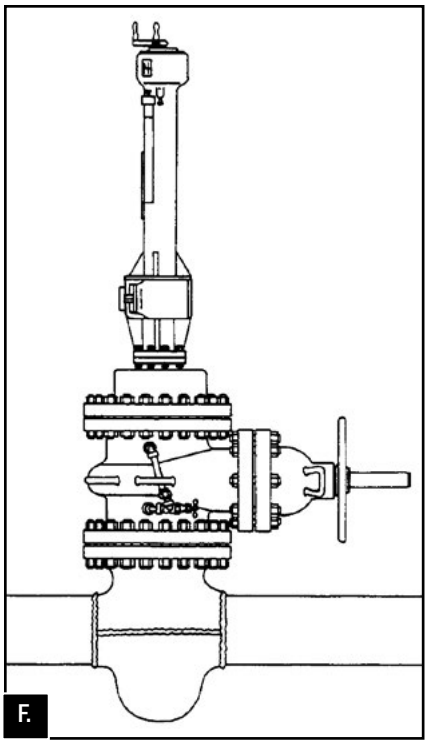

F.

11. Turn feed crank **clockwise** ¼ turn to retract boring bar slightly to release tension between the pilot drill and the pipe. For a standard C1-36 machine, one (1) revolution of the feed crank moves boring bar ⅛" – six (6) revolutions equals one inch. For a "slow-feed" C1-36-99002 machine, one (1) revolution of the feed crank moves boring bar ⅛" – eight (8) revolutions equals one inch.

12. Set feed indicator to zero. Mark point on feed indicator shield that arrow will reach to complete cut.

NOTE: Feed indicator has only 11" of travel, when indicator reads 8", cut should be stopped and indicator reset to zero. Indicator should read dimension shown below when cut is complete on Mueller NO-BLO® fitting.

SIZE OF FITTING	FROM POINT OF PILOT DRILL CONTACT ON PIPE	FROM POINT OF SHELL CUTTER CONTACT ON PIPE	AFTER CUT IS COMPLETE ON MUELLER NO-BLO® FITTING, READING SHOULD BE
10"	13 ⅜"	10 ¾"	5 ⅜"
12"	15 ⅜"	10 ¾"	7 ⅜"

13. Engage automatic feed by pushing in on automatic feed knob.

14. Operate the drilling machine.

NOTE: Before using an air or hydraulic power operator with the C1-36 machine, verify that it will turn the machine drive spindle clockwise, then mount the operator on the machine. Turn on operator and adjust to 50 to 60 rpm.

IMPORTANT WHEN USING AIR POWER OPERATOR: Maintain pressure of 90 psig. We recommend the use of a gauge at the throttle to determine the actual air pressure at the operator. If cutting becomes difficult and operator stalls, see detailed operating manual for C1-36 Machine.

15. Continue cutting operation until pipe is cut completely through and arrow reaches point marked on feed indicator shield. Shut off power operator.

16. When drilling through Mueller NO-BLO® bottom-out or side-out fittings, purge air from new line by opening bypass valve on the downstream gate valve when pilot drill penetrates pipe in upstream fitting. Gate valve and blow-off valve on down-steam gate valve should be closed. When all air is purged, close bypass valve.

17. Check completion of cut by releasing automatic feed and attempting to advance cutter by rotating feed crank **counter-clockwise**. If it does not advance easily, the cut is not completed and automatic feed knob must be pushed in for further cutting.

⚠ CAUTION: Stop advancing boring bar when limit line on boring bar becomes visible through drive box drain hole. (Fig. G).

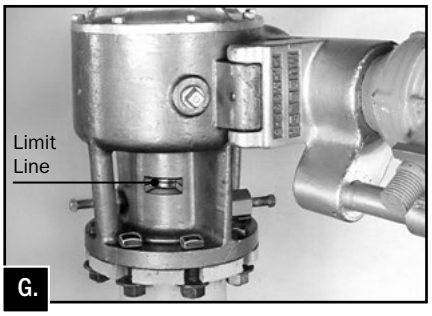

G.

18. When cut is completed, release automatic feed and retract cutter to rearmost position by rotating feed crank **clockwise**.

F–Remove Drilling Machine

1. Fully close gate valve.

2. Open blow-off valve on gate valve to exhaust the pressure above gate and also indicate tightness of gate valve closure. Be sure bypass valve is closed.

3. Remove drilling machine and adapter from gate valve.

4. Advance boring bar by rotating feed crank **counter-clockwise** until hub retaining bolt is exposed beyond face of adapter.

5. The drilling operation cuts completely through the pipe removing two sections of pipe on 12" size. These two sections are held inside shell cutter by pilot drill. On 10" size fitting, the whole section of pipe is removed. Remove hub retaining bolt, hub, cutter, and pilot drill from boring bar of machine.

6. Remove pilot drill from shaft. Remove the pilot drill from the cut-out sections of pipe. Remove the cut-out sections of pipe from inside the shell cutter by sliding them straight forward one at a time. Two screwdrivers inserted in the holes of the shell cutter will aid in removing these sections.

H-17619 Inspection Flange is for visually determining condition of inside of line stopper fitting and the inside of pipe after drilling operation is complete. This is done under pressure by following instructions 7 – 15.

7. Bolt Mueller® drilling machine adapter to gate valve. Check to be sure gasket is in good condition and in place.

8. Bolt Mueller® H-17619 Inspection Flange to drilling machine adapter. Check to be sure gasket is in good condition and in place (**Fig. H**).

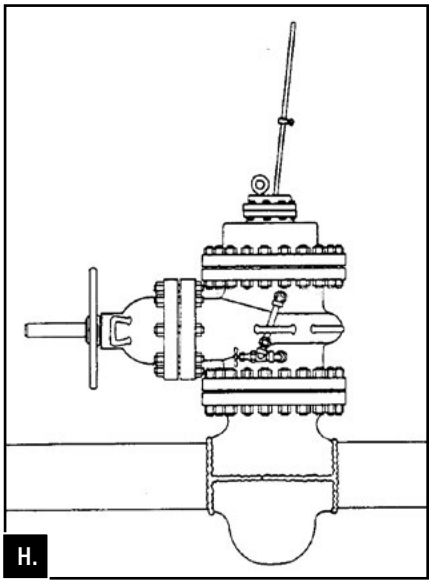

H.

9. Open bypass valve on gate valve. Be sure blow-off valve is closed. Check for, and correct any leakage.

10. Fully open gate valve.

11. Visually examine inside of fitting by viewing through plastic window. Use a flashlight or spotlight.

12. Use retrieving rod to locate, raise and hold above gate valve any object which could interfere with operation of stopper, such as a section of pipe. The retrieving rod has a ball joint type of pressure seal permitting it to be raised, lowered, rotated or moved from side to side.

13. Tighten sleeve screw to hold retrieving rod in raised position.

14. Close gate valve and bypass valve and test for tightness by opening blow-off valve.

15. Remove drilling machine adapter and inspection flange.

G–Prepare for Stopping-Off Operation

1. Attach combined crank and lifting yoke to Mueller® stopping machine. Rotate crank **counter-clockwise** until operating tube and guide tube are exposed.

2. Remove Mueller steel wedge stopper from protector sleeve by turning square end of expander screw **counter-clockwise** until stopper is free from protector sleeve. (Not applicable to bottom-out stopper.)

3. Check stopper to be sure it is fully contracted. Be sure expander screw threads in stopper are well lubricated. (Not applicable to bottom-out stopper.)

Refer to Form 11967 for bottom-out stopper instructions.

4. Attach stopper to stopping machine.

a) Insert square on expander screw into operating tube.

b) Align lug on top expanding wedge with matching recess or slot in end of guide tube.

c) Slide stopper coupler nut into position over top expanding wedge threads and tighten securely by hand.

5. Lubricate stopper cover with Mueller stopper cover lubricant.

6. Retract stopper to rearmost position by rotating crank **clockwise**.

7. Position stopping machine on gate valve. For best stop-off operation of stopper, bypass connection in stopping machine body should always face the section of pipe to be stopped off. Bolt stopping machine to gate valve with gasket in place.

8. Follow these instructions when using two stopping machines to stop off a section of pipe using an integral bypass line to maintain service (**Fig. I**).

a) Assemble a bypass line between the bypass connections of stopping machines.

b) Install Save-A-Valve® drilling nipple on the section of pipe to be stopped off near upstream stopping machine (stopping machine near the source of pressure). This nipple will be used as a purging and blow-down connection.

c) When using 10" size Mueller NO-BLO fittings, install a second Save-A-Valve drilling nipple on the section of pipe to be stopped off near downstream stopping machine (stopping machine away from the source of pressure). Connect an equalizing line between this nipple and bypass line.

NOTE: When using 12" size Mueller NO-BLO fitting an equalizing line is not required.

NOTE: Be sure to pressure test bypass line and any newly installed fitting(s), and repair any leaks found before putting them into service.

9. Follow these instructions when using two stopping machines to stop off a section of pipe using a separate bypass line to maintain service (**Fig. J**).

a) Install two Save-A-Valve® drilling nipples, one on the pressure side of each stopping machine. Connect these two nipples to form a bypass line around the two stopping machines and the section of pipe to be stopped off.

MUELLER LINE STOPPER UNIT NO. 4SW

Installing and Stopping-Off 10" and 12" Mueller NO-BLO® Line Stopper Fittings

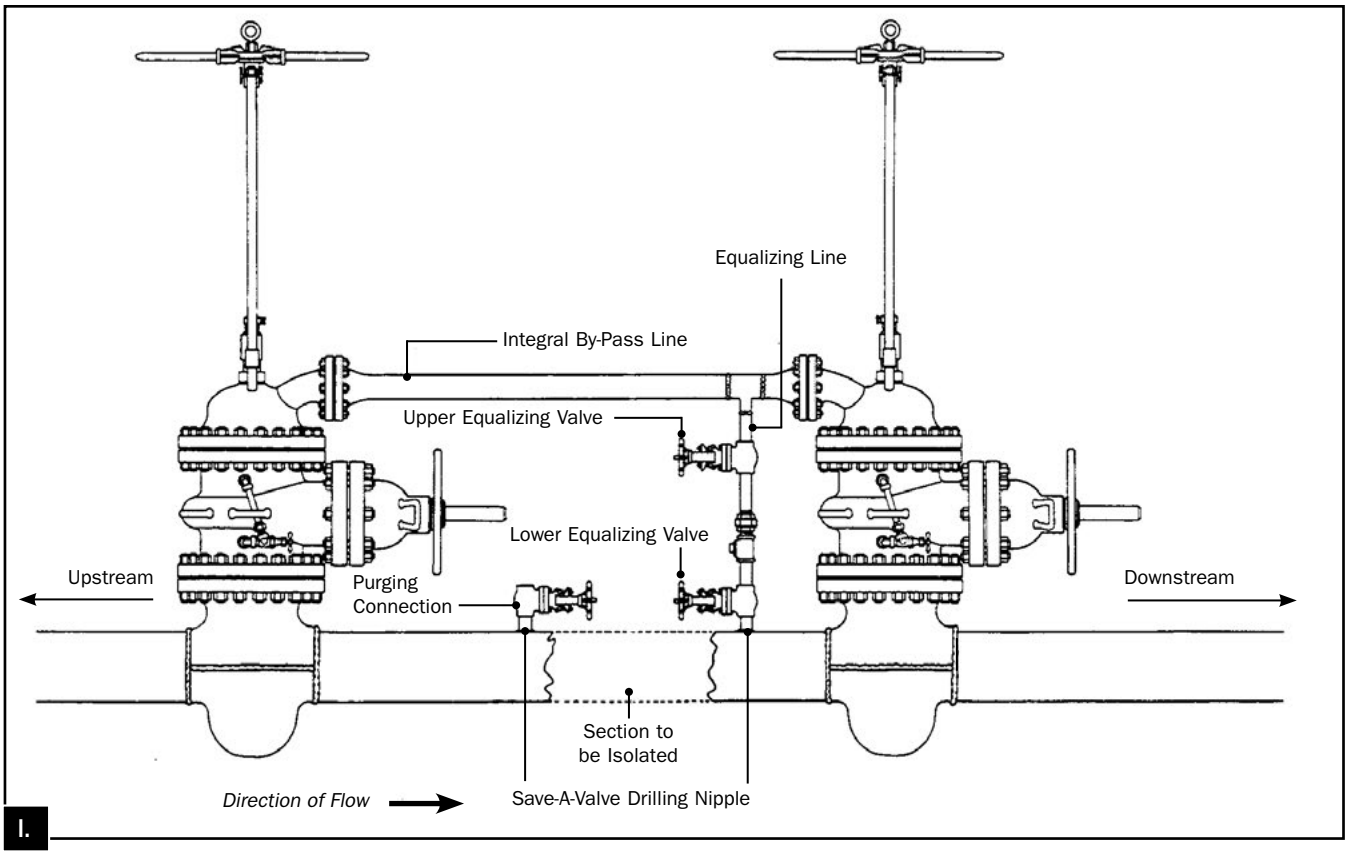

I.

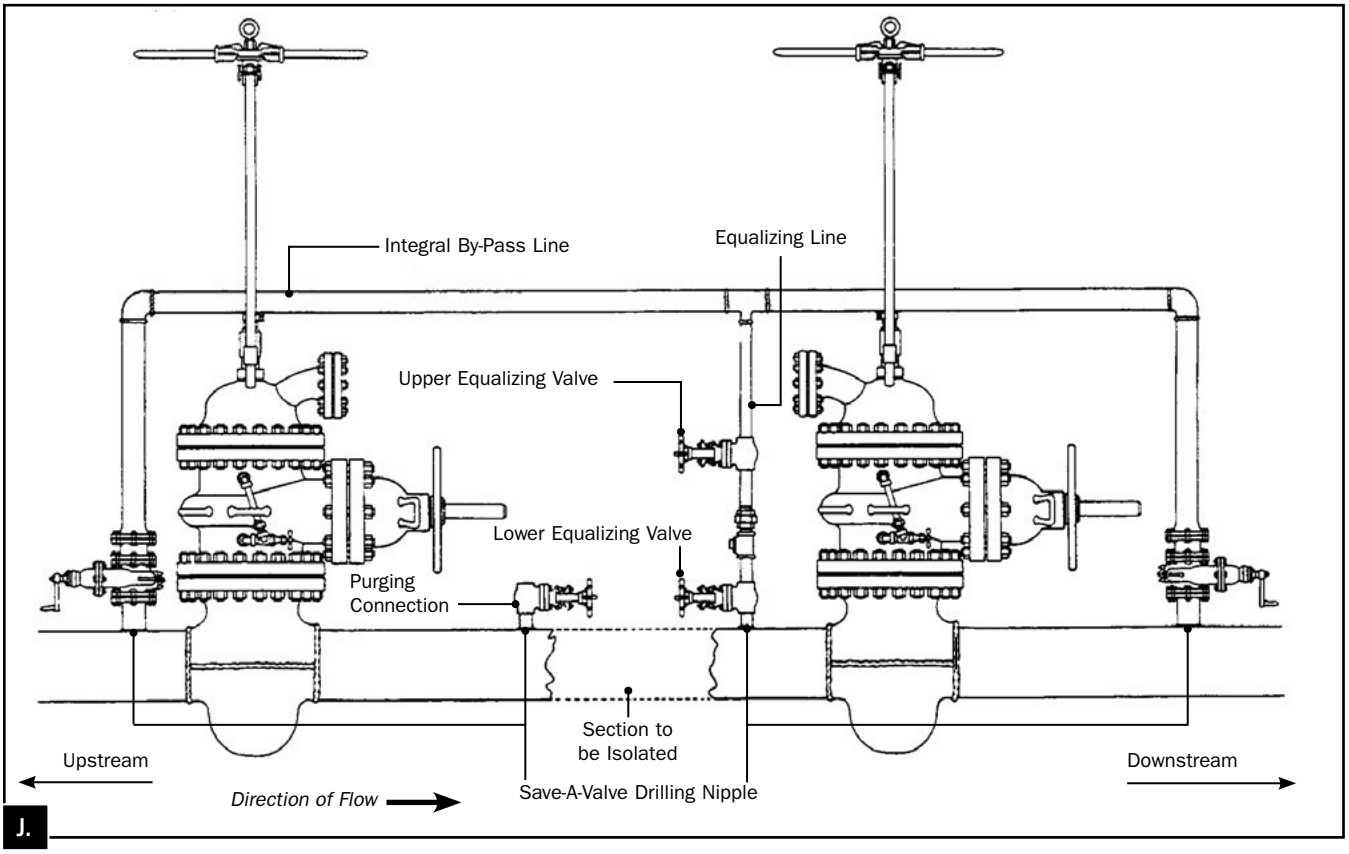

J.

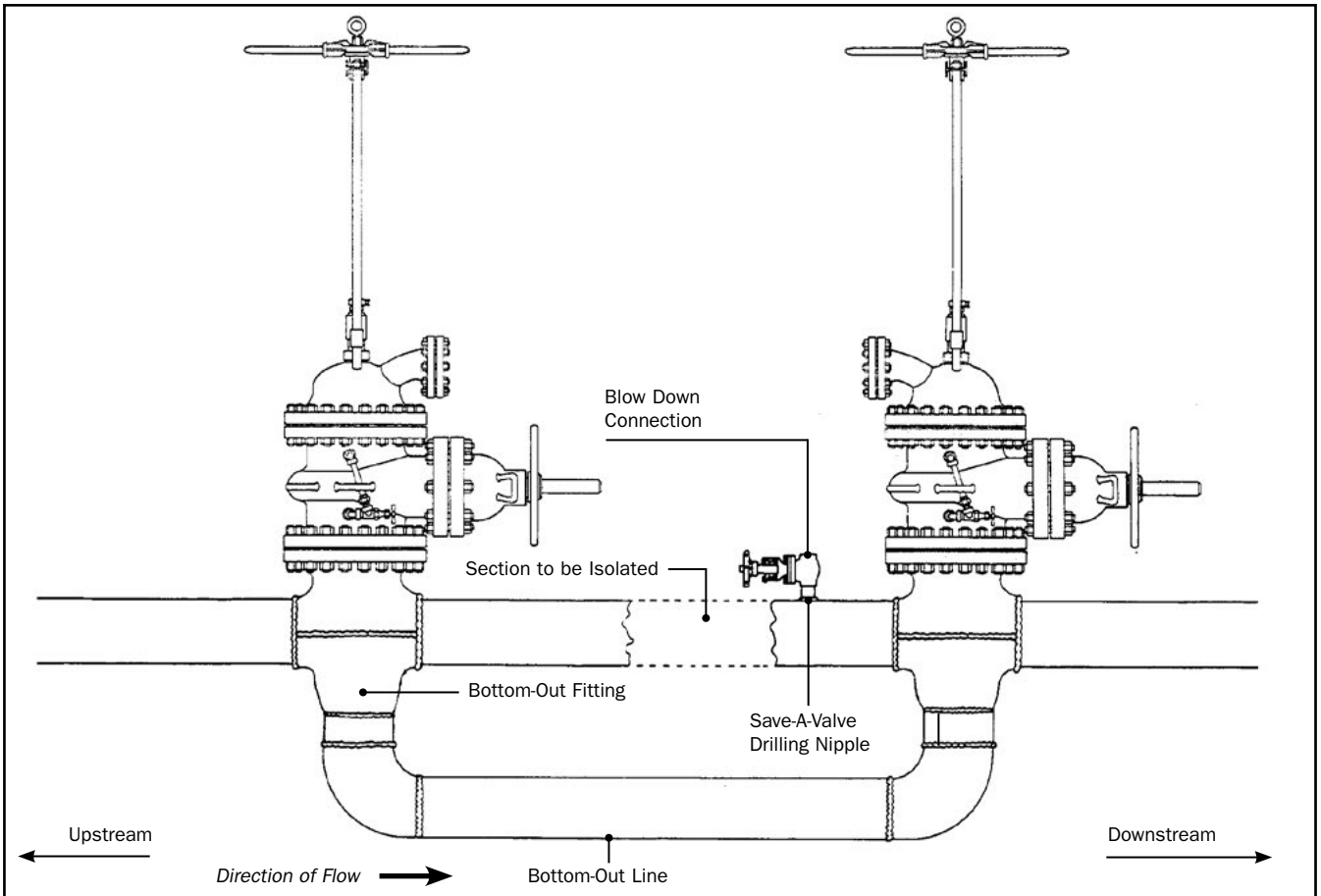

NOTE: While Bottom-Out fittings and Bottom-Out line are illustrated, Side-Out fittings with a line connected between the sides of the fittings use similar setups and are applied in the same manner.

K.

b) Install a third Save-A-Valve® drilling nipple on the section of pipe to be stopped off near upstream stopping machine (near the source of pressure). This nipple will be used as a purging and blow-down connection.

c) When using 10" size Mueller NO-BLO® fittings, install a fourth Save-A-Valve drilling nipple on the section of pipe to be stopped off near downstream stopping machine (away from the source of pressure). Connect an equalizing line between this nipple and bypass line. When using 12" size Mueller NO-BLO fitting, an equalizing line is not required.

NOTE: Be sure to pressure test the bypass line and any newly installed fitting(s), and repair any leaks found before putting them into service.

10. Follow these instructions when using two stopping machines to stop off a section of pipe and maintain service through bottom-out fittings and bottom-out line or side-out fitting and line (**Fig. K**).

a) Install a Save-A-Valve drilling nipple on the section of pipe to be stopped off near downstream stopping machine (away from the source of pressure). This nipple will be used to blow down the stopped off section before removing.

b) The bottom-out (or side-out) line is used for the bypass line to maintain service.

c) An equalizing line is not required since pressure can be equalized by relaxing stoppers slightly to equalize pressure. This is due to the relatively short length of the remaining stubs of old removed pipeline.

NOTE: Be sure to pressure test the bypass line and any newly installed fitting(s), and repair any leaks found before putting them into service.

H–Installation of Save-A-Valve® Drilling Nipples

If using 4" Save-A-Valve drilling nipples, see operating instruction book for Mueller® line stopping unit No. 2, No 3SW or No. 3SW-500. If using 6" or 8" Save-A-Valve drilling nipples, see operating instruction book for Mueller line stopping unit No. 3, No 3SW or No. 3SW-500.



L.

If using ¾" – 3" Save-A-Valve drilling nipples, follow instructions below (**Fig. L**). (See Mueller Gas Distributions Products Catalog for machines and equipment to perform this operation.)

1. Clean surface of pipe where nipple is to be welded.

2. Remove completion cap and completion plug from nipple.

3. Place nipple in place and weld to pipe. On cast iron pipe, use a service clamp and attach nipple to clamp.

4. Thread test cap to nipple, apply air pressure and test for leaks using soapsuds or a leak detection fluid. (Add glycerin to soapsuds in freezing weather.)

5. Remove test cap and attach Mueller gate valve. Open gate valve fully. (The smaller size drilling nipples require a bushing between the nipple and gate valve.)

6. Attach proper size machine adapter nipple and drilling tools to Mueller E-5, EH-5, D-5 or DH-5 Drilling Machine. For detailed instructions, see operating instruction books for these machines.

7. Apply a small amount of Mueller cutting grease to the lead cutting edges of drill or shell cutter.

8. Place drilling machine and adapter on gate valve and tighten. Test for leaks. See operating instructions for these machines.

9. Advance boring bar until drill touches pipe, then retract a small amount so drill is not started in a bind.

10. Begin drilling operation. When hand operating, begin with a light even feed, then a heavier feed, then finish drilling with a light even feed.

11. Continue drilling until hole is completely drilled out. This can be determined by feel of feeding mechanism or by measuring advance of boring bar.

12. After drilling is complete, retract boring bar to rearmost position and close gate valve.

13. Remove drilling machine and machine adapter from gate valve.

I–Place Bypass Line in Operation

1. If integral bypass line is being used between two stopping machines, purge air from bypass line by:

a) Open blow-off valve on downstream gate valve.

b) Open bypass valve on upstream gate valve.

c) When all air is purged from bypass line through downstream blow-off valve, close this valve. Bypass line is now in operation.

NOTE: If using equalizing line, purge air from line by removing plug from tee in equalizing line, open upper gate valve until all air is purged through open tee, then close valve. Replace plug in tee in equalizing line.

2. If separate bypass line is being used around two stopping machines and 4" or larger Save-A-Valve drilling nipples are used to form the bypass line, purge air from bypass line.

a) Turn bypass stop on gate valve on downstream bypass connection to test position.

b) Turn bypass stop on gate valve on upstream bypass connection to bypass position.

c) When all air is purged through bypass stop on downstream gate valve bypass connection, turn the bypass stop to bypass position.

d) Fully open gate valve on upstream and downstream bypass connections. Bypass line is now in operation.

NOTE: If using an equalizing line, purge air from this line by removing plug in tee in equalizing line, open upper gate valve until all air is purged through open tee. Close upper valve and replace plug in tee.

NOTE: If using 3" or smaller Save-A-Valve drilling nipples to form a bypass line and an equalizing line is not required, it is necessary to use an additional gate valve and a tee with a plug on the downstream bypass connection. This construction is similar to the equalizing line. Air is purged from bypass line by removing plug in the tee, opening upper gate valve and then opening upstream bypass connection gate valve slightly. When all air is purged through open tee, close upper gate valve and replace plug in tee. Open all gate valves in bypass line to place the line in operation.

3. When using bottom-out fittings and bottom-out line, the bottom-out line is used as the bypass line (similar for side-out fittings). This line was purged of air during the drilling operation and is already in operation.

J–Stopping Off Operation

NOTE: When using a bypass line to maintain service around stopping machines and section of pipe to be stopped off, insert and expand an upstream stopper first.

1. Open bypass valve on gate valve. Be sure blow-off valve is closed.

2. Open stopping machine gate valve fully. Advance stopper by rotating crank, or double handled ratchet, **counter-clockwise** until squared section on operating tube screw is exposed. **Advance carefully until stopper contracts bottom of Mueller® fitting. To determine that stopper has contacted bottom of fitting, watch motion of guide tube cap. When this motion stops, stopper has made contact. DO NOT force stopper against bottom of fitting since this is merely a positioning operation.**

IMPORTANT: Rotate crank (or double handled ratchet) clockwise three full turns to provide adequate clearance for free expansion of stopper.

3. Loosen wing nut and shift clamp bar from contact with guidepost to contact with squared section of operating tube screw. This places expanding mechanism in operation. Tighten wing nut.

4. If crank has been used to insert stopper, replace it with double handled ratchet.

5. Set ratchet dog for **clockwise** rotation and rotate ratchet to expand stopper. Approximately six or seven (6 or 7) revolutions will effect a stop off in a Mueller fitting.

6. With both stoppers expanded, open gate valve on Save-A-Valve drilling nipple used as a purging and blow-down connection to blow down the stopped-off section of pipe Stopper tightness will also be indicated at this point. Expand stopper further if needed to achieve shut off.

7. Proceed with work to be done on stopped-off section of pipe.

8. When using bottom-out or side-out fittings, cut off and remove stopped-off section of pipe. Weld caps on stub ends of pipe.

NOTE: When cutting or welding near line stopper fittings containing stoppers, maintain the following minimum distance to prevent damage to stopper:

- ***10" fitting - min. distance 18"***
- ***12" fitting - min. distance 20"***

Use wet burlap or rags over fitting if this distance cannot be maintained. If stopped-off section of pipe is being torch-cut, refer to Form 12666 for minimum distance and guidelines.

9. When all desired work has been done on stopped-off section of pipe, check to be sure all welded joints are cool before proceeding.

10. When using 10" Mueller NO-BLO® fittings, pressure must be equalized around stoppers before contracting them. To equalize pressure, open upper and lower gate valves in the equalizing line. Open gate valve on nipple used as a purging connection until all air is purged then close this valve. Pressure will now build up in stopped-off section.

NOTE: It is not necessary to equalize pressure when using 12" size Mueller NO-BLO fittings and stoppers. When stoppers are first contracted, open purging connection until all air is purged then close. Pressure will build up in stopped-off section.

11. With pressure equalized, contract upstream stopper first. Set ratchet dog for **counter-clockwise** rotation and rotate ratchet the same number of turns as required to stop off the line or until the ratchet handle comes to a solid stop.

12. After stopper reaches limit of **counter-clockwise** rotation, reverse ratchet dog and rotate handle approximately one turn **clockwise**.

13. Loosen wing nut and shift clamp bar from contact with squared section of operating tube screw to contact with guidepost, then tighten wing nut.

14. Rotate ratchet handle (or replace with crank handle) **clockwise** to retract stopper to rearmost position.

15. Fully close stopping machine gate valves.

16. Fully close upper and lower gate valves in equalizing line.

17. When using separate bypass line, close gate valves on upstream and downstream bypass connections. Remove plug from tee in equalizing line and open upper valve in equalizing line. This allows bypass line to blow down.

18. When using integral bypass line, open the blowoff valves on gate valve to blow down bypass line.

19. Remove equalizing line, bypass line and stopping machines.

K–Plug and Cap the Save-A-Valve Drilling Nipples

If using 4" Save-A-Valve drilling nipples, see operating instruction book for Mueller line stopping unit No. 2, No 3SW or No. 3SW-500. If using 6" or 8" Save-A-Valve drilling nipples, see operating instruction book for Mueller line stopping unit No. 3, No. 3SW or No. 3SW-500. If using ¾" – 3" Save-A-Valve drilling nipples, follow instructions below:

1. Thread drilling nipple completion plug to inserting tool of the Mueller E-5, EH-5, D-5 or DH-5 Drilling Machine. Lubricate these threads.

2. Apply non-hardening pipe thread sealant to plug threads.

3. Attach drilling or completion machine to gate valve. Test for leaks. See operating instructions for these machines.

4. Open gate valve, advance boring bar and thread completion plug into nipple securely to rotating boring bar **clockwise**.

5. Remove inserting tool from completion plug by turning handle **counter-clockwise** until inserting tool is free from plug.

6. Remove drilling machine or completion machine and gate valve from nipple.

7. Tighten completion plug with wrench.

8. Apply pipe thread sealant to completion cap threads and thread cap tightly to the nipple. Test for leaks with soap solution. (Add glycerin in freezing weather.)

L–Install Completion Plug in Line Stopper Fitting

Latest design Mueller® completion plugs have an O-ring seal and a pressure equalizing valve in the center of the completion plug. The end of the inserting tool or extracting tool will open equalizing valve.

1. Hold back on completion machine shaft and loosen holding clamp, then lower shaft of completion machine.

2. Attach Mueller plug-inserting tool to completion plug.

a) Push fork of inserting tool to rearmost position.

b) Hold fork in this position and thread end of inserting tool into inside threads in top of completion plug.

c) Check to be sure inserting tool has opened equalizing valve.

d) Release fork so fork lugs will engage with slots in completion plug. This may require backing off inserting tool slightly.

3. Attach plug-inserting tool, with completion plug, to shaft of completion machine.

a) Remove protector nut from end of shaft.

b) Align lug on shaft of completion machine to fit into matching recess or slot in plug inserting tool.

c) Thread coupler sleeve on plug inserting tool to shaft threads.

4. Make sure threads on completion plug and fitting are clean. Coat the threads and O-ring on completion plug with a heavy grease.

5. Withdraw shaft to rearmost position and tighten holding clamp.

6. Place completion machine on gate valve in same position as marked in the alignment operation, paragraph D-10. With gasket in good condition and in place, bolt completion machine solidly to gate valve.

7. Open bypass valve on gate valve.

8. Fully open gate valve.

9. Hold back on completion machine shaft and loosen holding clamp. Slowly advance shaft and thread completion plug into fitting by rotating the shaft **clockwise**. DO NOT let shaft and completion plug fall as this may cause damage to completion plug threads or fitting threads.

NOTE: Should any difficulty be encountered attempting to thread completion plug into fitting, the following is suggested:

a) Retract shaft with completion plug to rearmost position, and tighten holding clamp.

b) Fully close gate valve.

c) Be sure bypass valve is closed and open blow-off valve on gate valve.

d) Remove completion machine, inspect threads on completion plug for damage or debris and clean threads if necessary.

e) Assemble inspection flange (H-17619) to gate valve. Open bypass valve then open gate valve, and inspect threads in top of fitting for damage or debris.

f) If necessary to clean fitting threads, remove plug alignment tool and completion plug from completion machine shaft, and attached thread cleaning tool (89321).

g) Withdraw shaft to rearmost position and tighten holding clamp.

h) With gasket in good condition and in place, bolt completion machine solidly to gate valve.

i) Close blow-off valve, open bypass valve on gate valve and fully open gate valve.

j) Hold back on shaft, loosen holding clamp and slowly advance shaft and thread cleaning tool until drag is felt as cleaning tool contacts fitting threads. Tighten holding clamp.

k) Slowly rotate shaft several full revolutions in a **clockwise** direction. Loosen holding clamp, reposition cleaning tool downward about 1" to 1 ½", retighten clamp and rotate several more full revolutions in a **clockwise** direction.

l) Retract shaft to rearmost position, reposition and tighten holding clamp.

m) Close bypass valve, then open blow-off valve and close gate valve.

n) Remove machine from fitting and remove thread cleaning tool from shaft.

o) Attempt to install completion plug using procedure starting at L-1.

10. Remove plug-inserting tool from completion plug by turning shaft **counter-clockwise**.

11. Open blow-off valve on gate valve to relieve pressure in the machine and check tightness of completion plug.

12. Unbolt and remove completion machine and gate valve from fitting.

13. Apply final tightness to completion plug with completion plug wrench.

14. With gasket in good condition and in place, bolt completion cap solidly to fitting (**Fig. M**).

15. Test entire fitting again with soapsuds (add glycerin in freezing weather) or leak detection fluid.



M.

M–Future Removal of Completion Plug

1. Remove completion cap from Mueller® NO-BLO® Line Stopper Fitting and loosen completion plug slightly with completion plug wrench.

2. Bolt gate valve to the fitting and fully open. Leave bolt nuts loose at this point to permit shifting of gate valve if necessary.

3. Open blow-off valve on the gate valve.

4. Hold back on shaft and loosen holding clamp. Advance the shaft of the machine and attach plug alignment tool to end of shaft.

a) Remove protector nut from end of shaft.

b) Align lug on shaft of completion machine into matching recess or slot of plug alignment tool.

c) Thread coupler sleeve of alignment tool to shaft threads.

d) Push fork on alignment tool to rearmost position and tighten thumbscrew to hold fork in this position.

5. Withdraw shaft to rearmost position and tighten holding clamp.

6. Bolt completion machine to the gate valve using only a few bolts and leave bolts finger tight.

7. Hold back on completion machine shaft and loosen holding clamp. Slowly advance shaft until plug alignment tool touches completion plug. DO NOT let shaft fall.

8. At this point, it may be necessary to shift gate valve on fitting or completion machine on gate valve to align plug alignment tool with completion machine.

9. Rotate shaft **clockwise** until plug alignment tool is threaded into completion plug at least ½".

10. Securely bolt gate valve to the fitting. Mark the position of completion machine flange in relation to gate valve flange. This is for reference so completion machine can be properly positioned for final installation of completion plug when the job is finished.

11. Rotate shaft **counter-clockwise** until plug alignment tool is unthreaded from completion plug.

12. Withdraw shaft to rearmost position and tighten holding clamp.

13. Remove completion machine from gate valve.

14. Hold back on shaft and loosen holding clamp. Advance the shaft of machine to expose plug alignment tool.

15. Remove plug alignment tool from shaft.

16. Attach plug-extracting tool to shaft of completion machine.

a) Align lug on shaft of completion machine into matching recess or slot in plug extracting tool.

b) Thread coupler sleeve on plug, extracting tool to completion machine shaft.

17. Withdraw shaft to rearmost position and tighten holding clamp.

18. Place completion machine on gate valve in same position as marked in alignment operation. (See M-10). With gasket in good condition and in place, securely bolt completion machine to gate valve.

19. Hold back on shaft and loosen holding clamp. Slowly advance shaft until plug extracting tool contacts completion plug. DO NOT let shaft fall.

20. Rotate shaft clockwise until plug extracting tool is firmly threaded into top of completion plug.

21. The equalizing valve in the completion plug will be opened by the end of extracting tool. Flow from blow-off valve will indicate equalizing valve is open. Close the blow-off valve to equalize pressure in machine. DO NOT attempt to remove completion plug until pressure is equalized.

22. Rotate shaft **counter-clockwise** until completion plug is unthreaded from fitting.

23. Withdraw shaft to rearmost position and tighten holding clamp.

24. Fully close gate valve and open blow-off valve on gate valve to relieve pressure in machine and check tightness of gate valve closure. Check to be sure bypass valve on the gate valve is also closed.

25. Remove completion machine from gate valve.

26. Hold back on shaft and loosen holding clamp. Advance shaft of completion machine until completion plug and plug extracting tool are exposed.

27. Remove plug extracting tool and completion plug from end of shaft. Place protector nut on end of shaft.

28. Unthread plug-extracting tool from completion plug.

29. Proceed with stopping-off operation and after desired work is completed, finish the plug inserting operation, both previously described.

CALCULATING C1-36 TURNS

1. Fully retract shell cutter and pilot drill into C1-36/C1-36-99002 drilling machine adapter.

2. Determine if tip of pilot drill is sticking out past the machine adapter or recessed inside.

Pilot tip past drilling machine adapter flange face:

1. Measure the distance from face of the top gate valve flange to the top of the pipe.

Record this distance in inches. (A)

2. Measure distance pilot tip is past the drilling machine flange face.

Record this distance in inches. (B)

3. Subtract distance (B) from distance (A) to achieve travel (T) distance to top of main.

4. For a standard feed 6:1 C1-36 machine, multiply this distance (T) by 6 to achieve total number of turns to hand advance to contact the main.

5. For a slow feed 8:1 C1-36-99002 machine, multiply this distance (T) by 8 to achieve total number of turns to hand advance to contact the main.

Pilot tip recessed inside drilling machine adapter flange face:

1. Measure distance from the face of the top gate valve flange to the top of the pipe.

Record this distance. (A)

2. Measure the distance pilot tip is recessed inside drilling machine adapter flange face.

Record this distance. (B)

3. Add distance (A) & (B) to achieve travel distance (T) to contact top of main.

4. For a standard feed 6:1 C1-36 machine, multiply this distance (T) by 6 to achieve total number of turns to hand advance to contact the main.

5. For a slow feed 8:1 C1-36-99002 machine, multiply this distance (T) by 8 to achieve total number of turns to hand advance to contact the main.

MUELLER® | ECHOLOGICS® | HYDRO GATE® | HYDRO-GUARD® | HYMAX® | JONES® | KRAUSZ® | MI.NET® | MILLIKEN® | PRATT® | SINGER® | U.S. PIPE VALVE AND HYDRANT

1.800.423.1323 – www.muellergas.com – moreinfo@muellerwp.com
INTERNATIONAL - 1.423.490.9555 **-** www.mueller-international.com **-** international@muellercompany.com

Mueller refers to one or more of Mueller Water Products, Inc. a Delaware corporation ("MWP"), and its subsidiaries. MWP and each of its subsidiaries are legally separate and independent entities when providing products and services. MWP does not provide products or services to third parties. MWP and each of its subsidiaries are liable only for their own acts and omissions and not those of each other. MWP brands include Mueller®, Echologics®, Hydro Gate®, Hydro-Guard®, HYMAX®, Jones®, Krausz®, Mi.Net®, Milliken®, Pratt®, Singer®, and U.S. Pipe Valve & Hydrant. Please see muellerwp.com/brands and krauszusa.com to learn more.

MUELLER

Copyright © 2020 Mueller Water Products, Inc. All Rights Reserved. The trademarks, logos and service marks displayed in this document are the property of Mueller Water Products, Inc., its affiliates or other third parties. Products marked with a section symbol (§) are subject to patents or patent applications. For details, visit www.mwppat.com. These products are intended for use in potable water applications. Please contact your Mueller Sales or Customer Service Representative concerning any other application(s).